Tachometers and Tach/Hourmeters – AT and ATH Series

Features

- 0 - 3000 or 4000 RPM scale
- Optional LCD hourmeter, 0 to 100,000 hours
- Sensing from Magnetic Sensor, Battery Charging Alternator or Ignition Signal
- High Visibility Analogue Readout
- Air Core Movement
- Easy Calibration through DIP Switches
- Through-Dial Lighting
- Powered by 11-28 VDC Battery

CE *

* Products covered by this bulletin comply with European Union EMC directive 2004/108/EC regarding electromagnetic compatibility except as noted.

AT series tachometers are rugged, transistorized instruments with solid-state circuitry for indication of engine RPM. They are equipped with a bracket for mounting into a standard 86 mm (3- 3/8 in.) dash mounting hole. A full 270° sweep of the pointer gives an accurate indication on a large easy–to–read scale and the dial can be illuminated for night reading. ATH models are also equipped with an LCD hourmeter to record the elapsed engine running time.

Alternator sensing AT(H)A models are designed to function from pulses generated by a battery charge alternator with 4, 8, 12, 14, or 16 rotor poles. **Magnetic sensor AT(H)S models** receive a signal from a magnetic pickup sensor, located in close proximity to an engine flywheel or gearwheel with 50 to 304 teeth.

All models are powered by a 11-28 VDC battery (negative ground, positive ground or isolated electrical systems) and are reverse polarity protected. Backlight illumination is by use of a replaceable 12 V bulb (fitted as standard) or 24V bulb (included loose with each unit).

Series Models

ATS Series Magnetic Sensor Signal Tachometer
50-304 flywheel teeth 11-28 VDC, 2.5 to 15.2 kHz @ 3000 RPM

ATHS Series Magnetic Sensor Signal Tachometer/Hourmeter
50-304 flywheel teeth 11-28 VDC, 2.5 to 15.2 kHz @ 3000 RPM

ATA Series Alternator Signal Tachometer
3-32 pulses 12 VDC, 150 to 1600 Hz @ 3000 RPM

ATHA Series Alternator Signal Tachometer/Hourmeter
3-32 pulses 12 VDC, 150 to 1600 Hz @ 3000 RPM

Bezel Styles

Applications

These tachometers are specially designed for use on truck, marine, industrial, or stationary engines.

Dimensions

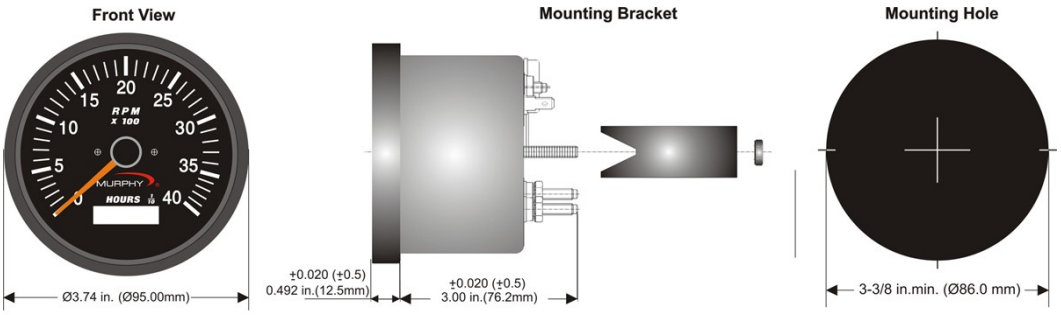

In order to consistently bring you the highest quality, full featured products, we reserve the right to change our specifications and designs at any time. MURPHY products and the Murphy logo are registered and/or common law trademarks of Murphy Industries, LLC. This document, including textual matter and illustrations, is copyright protected by Murphy Industries, LLC, with all rights reserved. (c) 2011 Murphy Industries, LLC.

Specifications

Magnetic Sensor Driven Models

Power Input: 11-28 VDC (70mA – 120mA except lamp load)

Backlight: 3.4W T-10 wedge base bulb,
12V bulb (supplied fitted) or 24V bulb (supplied loose)

RPM Input Signal Voltage: 1.5Vrms minimum

Accuracy: Tachometer: +2% full scale
Hourmeter: +0.01% hours, +1 count

Temperature Range: -40°C to +82°C
(no permanent damage shall occur)

Dial (Face Plate): 270° sweep, white numerals over
black background)

Bezel: 304 stainless steel for bright and
IS 513 E.E.E. CRCA steel for black

Scales: 0-3000 or 0-4000 RPM

Case Material: Plastic

Hourmeter Range: 99999.9 hours in 0.1 increments.

Alternator Driven Models

Power Input: 11-28 VDC (70mA – 120mA except lamp load)

Backlight: 3.4W T-10 wedge base bulb,
12V bulb (supplied fitted) or 24V bulb (supplied loose)

RPM Input Signal Voltage: V low: 0.5V max, V high: 8.0V min.

Accuracy: Tachometer: +2% full scale
Hourmeter: +0.01% hours, +1 count

Temperature Range: -40°C to +82°C
(no permanent damage shall occur)

Dial (Face Plate): 270° sweep, white numerals over
black background

Bezel: 304 stainless steel for bright and
IS 513 E.E.E. CRCA steel for black

Scale: 0-3000 or 0-4000 RPM

Case Material: Plastic

Hourmeter Range: 99999.9 hours in 0.1 increments.

How to Order

Order the Tachometer or Tachometer/Hourmeter by model number.

Magnetic Sensor Tachometer 0-3000 RPM, 50 - 304 flywheel teeth

Model #	Designation
ATS-30	Bright Stainless Steel Bezel
ATS-30-A	Black Stainless Steel Bezel
ATS-30-B	SAE Bright Stainless Steel Bezel
ATS-30-C	SAE Black Stainless Steel Bezel

Magnetic Sensor Tachometer 0-4000 RPM, 50 - 304 flywheel teeth

Model #	Designation
ATS-40	Bright Stainless Steel Bezel
ATS-40-A	Black Stainless Steel Bezel
ATS-40-B	SAE Bright Stainless Steel Bezel
ATS-40-C	SAE Black Stainless Steel Bezel

Magnetic Sensor Tach/Hourmeter 0-3000 RPM, 50-304 flywheel teeth

ATHS-30	Bright Stainless Steel Bezel
ATHS-30-A	Black Stainless Steel Bezel
ATHS-30-B	SAE Bright Stainless Steel Bezel
ATHS-30-C	SAE Black Stainless Steel Bezel

Magnetic Sensor Tach/Hourmeter 0-4000 RPM, 50-304 flywheel teeth

ATHS-40	Bright Stainless Steel Bezel
ATHS-40-A	Black Stainless Steel Bezel
ATHS-40-B	SAE Bright Stainless Steel Bezel
ATHS-40-C	SAE Black Stainless Steel Bezel

Alternator Signal Tachometer 0-3000 RPM, 3 - 32 pulses

ATA-30	Bright Stainless Steel Bezel
ATA-30-A	Black Stainless Steel Bezel
ATA-30-B	SAE Bright Stainless Steel Bezel
ATA-30-C	SAE Black Stainless Steel Bezel

Alternator Signal Tachometer 0-4000 RPM, 3 - 32 pulses

ATA-40	Bright Stainless Steel Bezel
ATA-40-A	Black Stainless Steel Bezel
ATA-40-B	SAE Bright Stainless Steel Bezel
ATA-40-C	SAE Black Stainless Steel Bezel

Alternator Signal Tach/Hourmeter 0-3000 RPM, 3 – 32 pulses

ATHA-30	Bright Stainless Steel Bezel
ATHA-30-A	Black Stainless Steel Bezel
ATHA-30-B	SAE Bright Stainless Steel Bezel
ATHA-30-C	SAE Black Stainless Steel Bezel

Alternator Signal Tach/Hourmeter 0-4000 RPM, 3 - 32 pulses

ATHA-40	Bright Stainless Steel Bezel
ATHA-40-A	Black Stainless Steel Bezel
ATHA-40-B	SAE Bright Stainless Steel Bezel
ATHA-40-C	SAE Black Stainless Steel Bezel

FW MURPHY
P.O. Box 470248
Tulsa, Oklahoma 74147 USA
Phone: +1 918 317 4100 Fax: +1 918 317 4266
E-mail: sales@fwmurphy.com

INDUSTRIAL PANEL DIVISION
Fax: +1 918 317 4124
E-mail: ipdsales@fwmurphy.com

MURPHY POWER IGNITION
Web site: www.murphy-pi.com

CONTROL SYSTEMS & SERVICES DIVISION
P.O. Box 1819
Rosenberg, Texas 77471 USA
Phone: +1 281 633 4500 Fax: +1 281 633 4588
E-mail: css-solutions@fwmurphy.com

FRANK W. MURPHY LTD.
Church Road, Laverstock
Salisbury, SP1 1QZ, UK
Phone: +44 1722 410055 Fax: +44 1722 410088
E-mail: sales@fwmurphy.co.uk
Web site: www.fwmurphy.co.uk

COMPUTRONIC CONTROLS
41 - 46 Railway Terrace
Nechells, Birmingham, B7 5NG, UK
E-mail: sales@computroniccontrols.com
Web site: www.computroniccontrols.com

www.fwmurphy.com

FW MURPHY INSTRUMENTS (HANGZHOU) CO., LTD.
77 23rd Street
Hangzhou Economic & Technological Development Area
Hangzhou, Zhejiang, 310018, China
Phone: +86 571 8788 6060 Fax: +86 571 8684 8878
E-mail: apsales@fwmurphy.com

BSI USA-ISO 9001:2008 FM 28221
UK-ISO 9001:2008 FM 29422
CHINA-ISO 9001:2008 FM 523851
Registered Facilities
ISO 9001 REGISTERED
Printed in U. S. A.

02/11/2011

Warranty - A limited warranty on materials and workmanship is given with this FW Murphy product.
A copy of the warranty may be viewed or printed by going to http://www.fwmurphy.com/warranty