Specifications

DT 3000 Series

Double Stacker

DT 3000 Series

DT 3040-2.0 without platform
mechanical steering

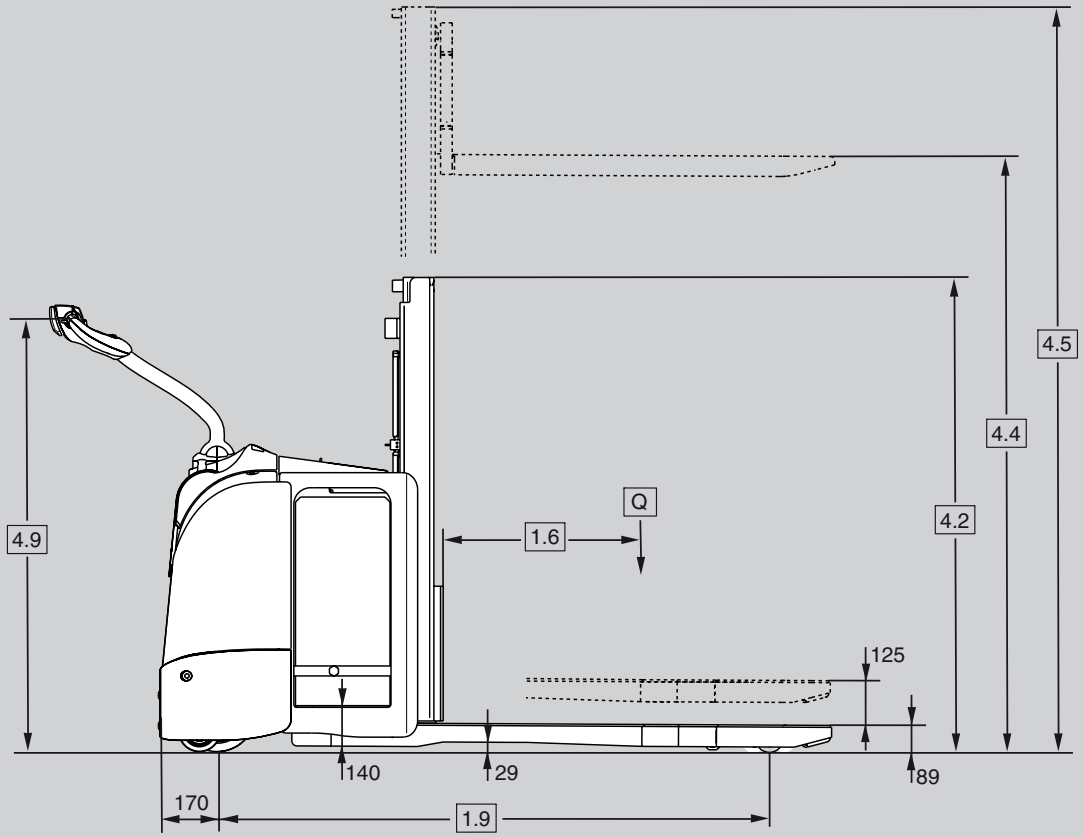

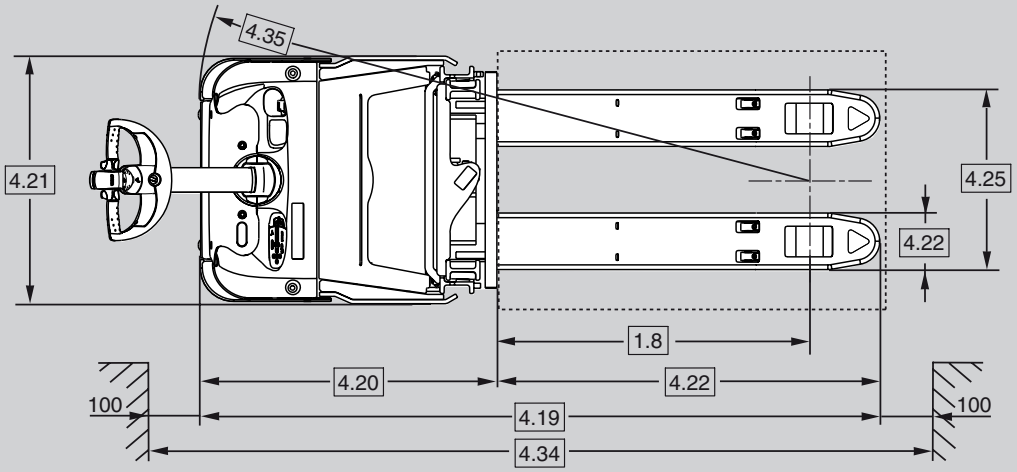

DT 3040-2.0 foldable platform
mechanical or electronic steering

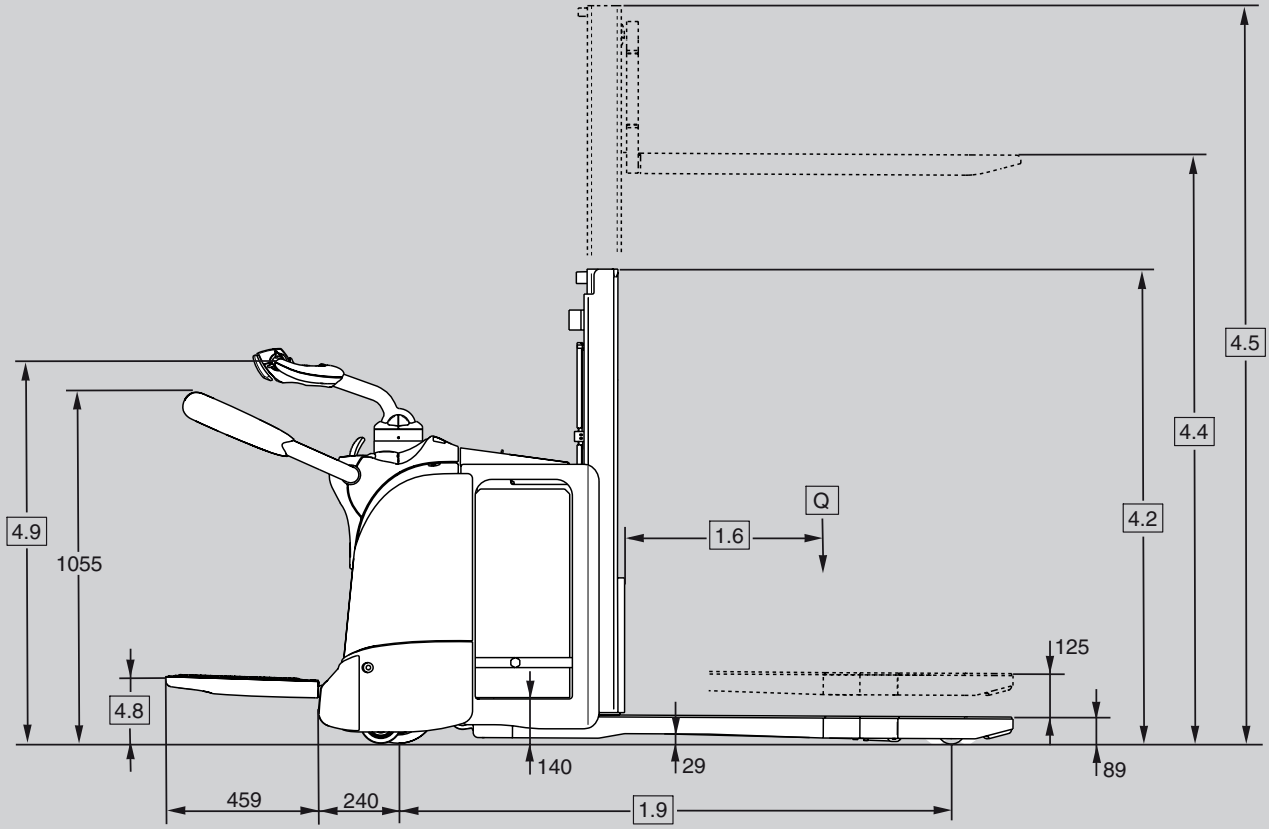

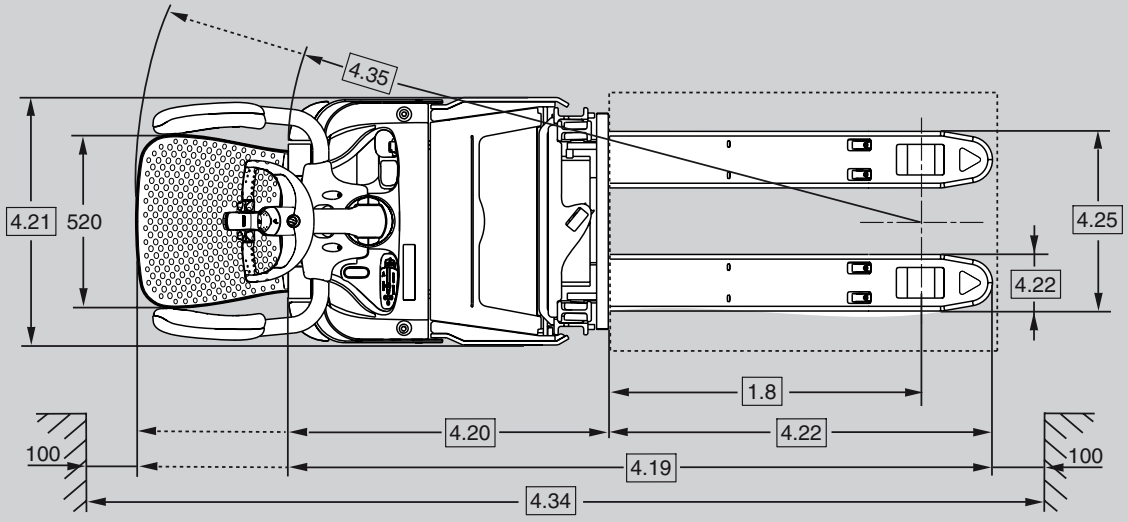

General Information	1.1	**Manufacturer**				Crown Equipment Corporation			
	1.2	**Model**				DT 3040-2.0			
			platform type			without platform		foldable platform	
			steering type			mechanical		mechanical	electric
	1.3	**Power**				electric			
	1.4	**Operator Type**				pedestrian		pedestrian / stand-on	
	1.5	**Load Capacity**		Q	t	2.0			
	1.6	**Load Centre**		c	mm	600			
	1.8	**Load Distance ***	initial lift raised	x	mm	900			
	1.9	**Wheel Base ****	initial lift raised	y	mm	1531	1603		
Weights	2.1	**Weight**	less battery		kg	see table 1			
	2.2	**Axle Load**	w. load, front / rear		kg	see table 1			
	2.3	**Axle Load**	w.o. load, front / rear		kg	see table 1			
Tyres	3.1	**Tyres Type**				Vulkollan			
	3.2	**Wheel Size**	front		mm	Ø 230 x 70			Ø 250 x 70
	3.3	**Wheel Size**	rear		mm	Ø 82 x 110			
	3.4	**Additional Wheels**	castor wheel		mm	Ø 125 x 54			
	3.5	**Wheels**	number (x=driven) front/rear			1x + 2/2			
	3.6	**Track Width**	front	b_{10}	mm	512			
	3.7	**Track Width**	rear	b_{11}	mm	370			
Dimensions	4.2	**Mast**	collapsed height	h_1	mm	see table 1			
	4.3	**Free Lift**		h_2	mm	see table 1			
	4.4	**Lift Height**		$h_{3}+h_{13}$	mm	see table 1			
	4.5	**Mast**	extended height	h_4	mm	see table 1			
	4.6	**Initial Lift**		h_5	mm	125			
	4.8	**Operator Stand Height**		h_7	mm	186			
	4.9	**Tiller Arm Height**	in drive position min./max.	h_{14}	mm	960 / 1460		1056 / 1359	
	4.15	**Fork Height**	lowered	h_{13}	mm	89			
	4.19	**Overall Length *****	initial lift raised	l_1	mm	1986	2058	2128 / 2588	
	4.20	**Headlength *****	initial lift raised	l_2	mm	836	908	978 / 1438	
	4.21	**Overall Width**		b_1/b_2	mm	744			
	4.22	**Fork Dimension**	standard	thxwxl	mm	60 x 186 x 1150			
	4.24	**Fork Carriage Width**	optional length	l	mm	650			
	4.25	**Width Across Forks**		b_5	mm	560			
	4.32	**Ground Clearance**	centre of wheelbase	m_2	mm	29			
	4.34	**Working Aisle Width ****	800x1200 mm initial lift raised	Ast	mm	2420	2492	2557 / 3002	
	4.35	**Turning Radius ****	initial lift raised	Wa	mm	1720	1792	1857 / 2302	
Performance	5.1	**Travel Speed**	w. / w.o. load		km/h	6.0 / 6.0		6.5 / 10.5	9.5 / 12.5
	5.2	**Lift Speed**	w. / w.o. load		m/s	0.18 / 0.30			
	5.3	**Lowering Speed**	w. / w.o. load		m/s	0.30 / 0.30			
	5.8	**Max. Gradeability**	w. / w.o. load, 5 min. rating		%	6 / 15			
	5.10	**Service Brake**				electric			
Motors	6.1	**Traction Motor**	60 min. rating		kW	2.0			2.5
	6.2	**Lift Motor**	10% on time		kW	2.2			
		Battery	acc. to DIN 43535	lxwxh	mm	B	B		
	6.3	**Max. Battery Box Size**		lxwxh	mm	212x624x627	284 x 624 x 627		
	6.4	**Battery Voltage**	nominal capacity 5h rating		V / Ah	24 / 240	24 / 375		
	6.5	**Battery Weight**			kg	212	309		
	8.1	**Type Controller**	drive			AC-transistor			
	8.4	**Sound Level**	acc. to EN 12053		dB(A)	59			

* initial lift lowered + 40 mm
** initial lift lowered + 58 mm
*** initial lift lowered – 18 mm

Table 1

					DT 3040-2.0										
1.2	**Model**	platform type			without platform					foldable platform					
		steering type			mechanical					mechanical			electric		
1.4	**Operator Type**				pedestrian					pedestrian / stand-on					
	Mast Type				**TL**		**TL**		**TF**	**TL**		**TF**	**TL**		**TF**
2.1	**Weight**	less battery		kg	810	840	830	860	950	830	960	1050	960	990	1080
2.2	**Axle Load**	w. load	front	kg	1835	1865	1855	1885	1930	1920	1935	1980	1890	1905	1950
			rear	kg	1225	1255	1245	1275	1320	1310	1325	1370	1370	1385	1430
2.3	**Axle Load**	w.o. load	front	kg	185	215	205	235	280	270	285	330	280	295	340
			rear	kg	875	905	895	925	970	960	975	1020	960	975	1020
4.2	**Mast**	collapsed height	h_1	mm	1270	1430	1270	1430	1740	1270	1430	1740	1270	1430	1740
4.3	**Free Lift**		h_2	mm	-	-	-	-	1355	-	-	1355	-	-	1355
4.4	**Lift Height**		h_3+h_{13}	mm	**1670**	**2100**	**1670**	**2100**	**2600**	**1670**	**2100**	**2600**	**1670**	**2100**	**2600**
4.5	**Mast**	extended height	h_4	mm	2100	2500	2100	2500	3025	2100	2500	3025	2100	2500	3025
6.4	**Battery Voltage**	nominal capacity 5h rating		V/Ah	24 / 240		24 / 375								

Electric System / Batteries

24-volt electrical system with nominal battery capacities from 240 Ah to 375 Ah.

Battery compartment rollers for horizontal battery removal are standard.

Standard Equipment

1. Maintenance free 3-phase (AC) traction and steering motors
2. e-GEN™ Braking System offers regenerative and frictionless electric braking. Mechanical braking applies only as parking brake
3. The X10® Control Handle places all truck functions at the operator's fingertips.
4. Crown Access 1 2 3® Comprehensive System Control
   - LCD display
   - Hour meter
   - Keyless start up with PIN code
   - Start up and run time diagnostics
   - Battery discharge indicator and lift interrupt
   - 3 selectable traction performance profiles
   - Onboard diagnostics with real time troubleshooting capabilities
5. FlexRide™ reduces vibrations and shocks to a minimum by combining (foldable platform only)
   - Soft floor mat with integrated presence sensor
   - Advanced platform suspension
   - Fully suspended drive unit
6. CAN-Bus technology
7. Sealed electrical Deutsch Connectors
8. Heavy-duty side restraints with soft side pads and quick-exit feature (foldable platform only)
9. Electric power disconnect switch
10. Vulkollan drive tyre, castor wheels and load wheels
11. Single load wheels
12. Ramp hold
13. Battery connector DIN 160A
14. Heavy-duty chassis with 10 mm thick steel skirt
15. Easily removable steel covers
16. Hinged steel top battery cover for easy battery access
17. Rabbit/turtle switch incorporates two levels of programmable travel performance
18. Proportional lifting/lowering
19. Heavy-duty castor wheels

Optional Equipment

1. Without foldable platform
2. Intelligent Electronic Steering System (foldable platform only)
   - Selectable performance profiles for speed reduction on curves
   - Tactile feedback feature analyses operational conditions and adjusts steering force for optimised control
   - Active Traction System adjusts drive tyre pressure as load weight changes
3. Outrigger lift/lower switches on left and right side of X10 Control Handle
4. Battery connector SBE 160 red
5. Rubber or Supertrac drive tyre
6. Tandem load wheels
7. Heavy-duty dual castor wheels
8. Freezer conditioning and corrosion protection
9. InfoLink® ready
10. Key switch or key pad
11. Load backrest
12. Work Assist accessory tube
13. Work Assist Accessories
    - Storage pockets
    - Scan gun holder
    - Small and medium clipboards
    - Mounting brackets for WMS terminals
14. Special paint
15. Metal mast grill

Electrical

24 volt electrical system managed by Crown's Access 1 2 3 Comprehensive System Control. Virtually maintenance-free AC traction motor provides strong acceleration and control at any speed. Sensors monitor functional parameters including steering, load weight, height, drive mode and speed, and adjusts operational settings automatically to suit conditions.

Power Unit

Designed to take the abuse of dock work, the rugged power unit features a reinforced

10 mm thick skirt to protect drive unit and castor components. A 12 mm skirt protects the battery and lift linkage. The contoured skirt provides greater ground clearance for working on ramps. Removable steel covers all around ensure internal components are protected against impacts yet easily accessible for service.

Operator Area and Controls

The DT 3000 Series incorporates numerous design features to improve operator comfort and productivity.

The folding FlexRide platform reduces shock transfer to the operator by more than 80 percent. Dock boards can be crossed without reducing speed. The lifetime platform suspension never requires adjustment and features solid state induction switches to avoid reliability issues caused by contaminants.

Heavy-duty side restraints feature 50 mm heavy-wall steel tubing and rugged

C-clamp mounting system. Soft polyurethane side pads are positioned for excellent support and comfort. The quick-exit feature (patent pending) allows the restraints to swing up for faster access to the load.

The X10 control handle, designed for simultaneous operation of all functions with one hand, improves side-stance operation for maximum visibility in both driving directions. An ergonomic forward/reverse thumb wheel allows for precise manoeuvring. The hand grips are urethane covered for insulation from cold and vibration with integrated horn buttons for easy activation.

A rabbit/turtle switch incorporates two levels of programmable travel performance so operators can select the setting that matches their experience level or application requirements.

Available electronic steering improves manoeuvrability and responsiveness, even with heavy loads. An intelligent tactile feedback feature analyses operational conditions and adjusts steering force for greater driver confidence. Combined with Active Traction and speed control on curves, electronic steering safely delivers top driving performance.

Access 1 2 3® Comprehensive System Control

Crown's Access 1 2 3 technology provides optimum performance and control by offering a communications interface for the operator and service engineer, intelligent coordination of lift truck systems and simplified service with advanced diagnostics.

The display includes a full featured on-board service tool so service engineers can actively view inputs and outputs during truck operation. No laptop or service terminal is required. Event code history, including the last 16 events, is accessible through the display.

The display provides a convenient interface for operators, keeping them informed (hour meter, BDI, operator messages, service codes) of any changes impacting truck performance and allowing them to choose from three performance profiles when enabled.

Performance tuning can be accessed at the display to customise truck performance for specific applications or operator requirements. In addition, up to 25 PIN codes can be assigned to individual operators and matched to one of the pre-programmed performance profiles if desired.

Power Unit Suspension

The drive unit suspension utilises hard-plated chrome rods and sealed slide bushings for long life without adjustment. The suspension provides 60 mm of travel with constant drive tyre pressure for excellent performance on ramps. The system reduced shocks to the chassis, mounted components and the operator.

Active Traction, standard on trucks with electronic steering, uses hydraulic pressure to increase traction. Reduced slipping and improved braking are especially helpful on steep or wet ramps.

e-GEN™ Braking System

The power of the high-torque AC traction motor is used to stop the truck and keep it static until a travel input is requested, even when operating on a gradient. This system eliminates adjustments and wear points for a lifetime of maintenance free use.

An automatic parking brake activates if the truck is stopped and the operator leaves the platform or power is disconnected.

Safety Regulations

Conforms to European safety standards.

Dimensions and performance data given may vary due to manufacturing tolerances. Performance is based on an average size vehicle and is affected by weight, condition of truck, how it is equipped and the conditions of the operating area. Crown products and specifications are subject to change without notice.

DT 3000 SPEC GB 10/10, 10
M03386-006-00
Printed in Germany

European Manufacturing:
Crown Gabelstapler GmbH & Co. KG
Roding, Germany
www.crown.com